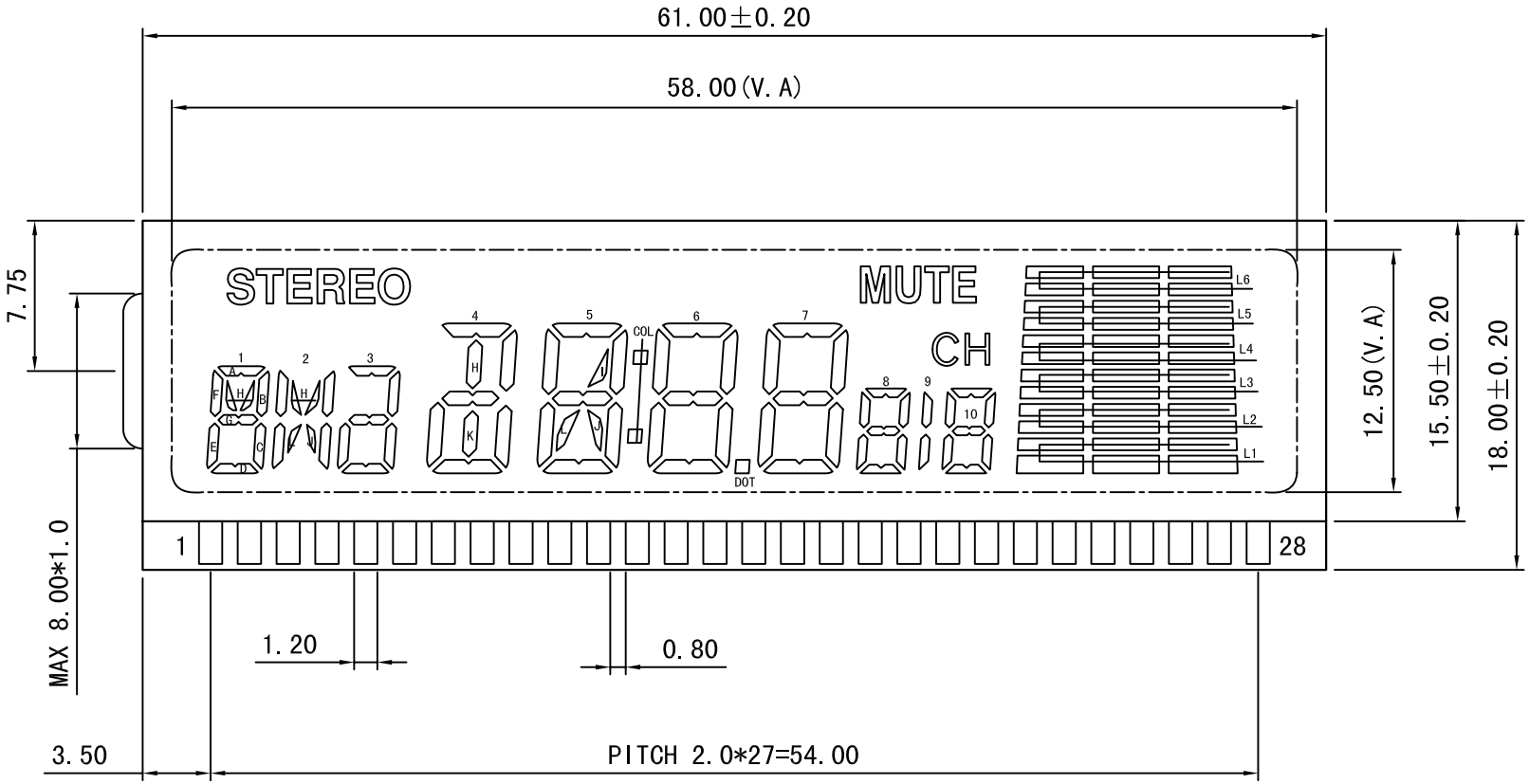

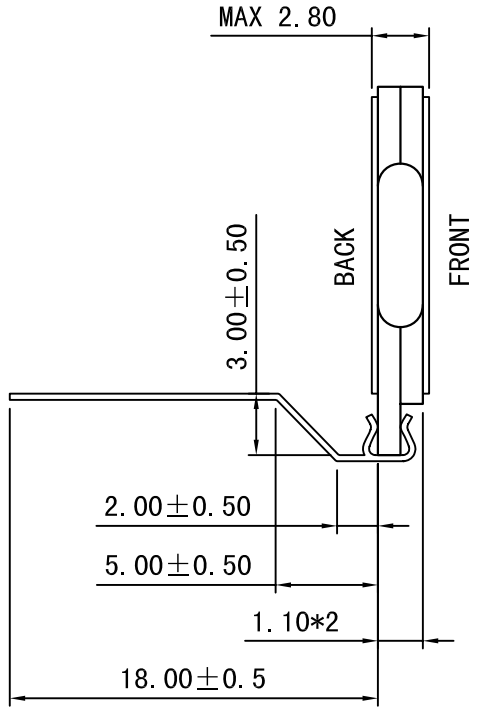

PIN	1	2	3	4	5	6	7	8	9	10	11	12	13	14	15	16	17	18	19	20	21	22	23	24	25	26	27	28
COM1	1C	1AG	1H	2LJ	3ADG		4A	4HK	5F	5A	5B	6F	6A	6B	7F	7A	7B	8F	8A	8B	10F	10A	10B	L5	L6	COM1		
COM2	STEREO	MUTE		2H		3C	4DEG		5IL	5G	5J		6G	DOT		7G		COL	8G		9	10G	CH	L3	L4		COM2	
COM3	1FE	1D	1B	2BCEF	3E	3B	4B	4C	5E	5D	5C	6E	6D	6C	7E	7D	7C	8E	8D	8C	10E	10D	10C	L1	L2			COM3

NOTES:

1. VIEWING ANGLE: 12:00 O'CLOCK
2. DISPLAY MODE:POSITIVE/TRANSFLECTIVE/TN TYPE
3. DRIVING VOLTAGE: 5.0V,DUTY:1/3,BIAS:1/2,FREQUENCY:64Hz
4. OPERATING TEMP.:0° C TO 50° C
5. STORAGE TEMP.:-10° C TO 60° C
6. CONNECTOR:PIN TYPE

VER.	MODIFY CONTENTS	DATE	DESIGN
6			
5			
4			
3			
2			
1			

XIAMEN OCULAR LCD DEVICES CO.,LTD

PART NO. GD-4479P

DESIGN BY

CHECKED BY

APP BY

TOLERANCES UNLESS OTHERWISE STATED
.X ±0.20
.XX ±0.10 ANGLES±1°
ALL DIMENSIONS IN MM
UNLESS OTHERWISE STATED

CUSTOMER:

APPLICATION:
☐ Instrument ☐ Audio Equipments ☐ Watch&Clock
☐ Telephone ☐ Automobile ■ Other
☐ Home Appliancess ☐ Air-condition

SAMPLE: ■ Yes ☐ No

COMPOSE TYPE:
☐ MONO MM
☐ ALONG MM

SHEET 1 OF 1